CHAPTER 56

Windows

CHAPTER 56
WINDOWS

Subject/Page	Date	COC
56-EFFECTIVE PAGES		
1	Oct 15/2023	
2	BLANK	
56-CONTENTS		
1	Oct 15/2021	
2	BLANK	
56-00-00		
1	Oct 15/2021	
2	Oct 15/2021	
3	Oct 15/2021	
4	BLANK	
56-10-00		
1	Oct 15/2021	
2	Oct 15/2021	
3	Oct 15/2021	
4	BLANK	
56-11-00		
1	Oct 15/2021	
2	Oct 15/2021	
3	Oct 15/2021	
4	Oct 15/2021	
5	Oct 15/2021	
6	Oct 15/2021	
7	Oct 15/2021	
8	Oct 15/2021	
56-12-00		
1	Oct 15/2021	
56-12-00 (cont.)		
2	Oct 15/2021	
3	Oct 15/2021	
4	Oct 15/2021	
56-21-00		
1	Oct 15/2021	
2	Oct 15/2021	
3	Oct 15/2021	
4	BLANK	
56-22-00		
1	Oct 15/2021	
2	Oct 15/2021	
3	Oct 15/2021	
4	BLANK	
56-31-00		
1	Oct 15/2021	
2	Oct 15/2021	
3	Oct 15/2021	
4	BLANK	

A = Added, R = Revised, D = Deleted, O = Overflow, C = Customer Originated Change

56-EFFECTIVE PAGES

ECCN 9E991 BOEING PROPRIETARY - See title page for details

CHAPTER 56
WINDOWS

CH-SC-SU	SUBJECT	PAGE	EFFECT
56-00-00	WINDOWS - INTRODUCTION	2	SIA ALL
56-10-00	WINDOWS - FLIGHT COMPARTMENT - INTRODUCTION	2	SIA ALL
56-11-00	WINDOWS - CONTROL CABIN FIXED WINDOWS - NO. 1 WINDOW	2	SIA ALL
56-11-00	WINDOWS - CONTROL CABIN FIXED WINDOWS - NO. 3 WINDOW	6	SIA ALL
56-12-00	WINDOWS - CONTROL CABIN SLIDING WINDOWS - NO. 2 OPENABLE WINDOW	1	SIA ALL
56-21-00	WINDOWS - PASSENGER CABIN WINDOWS - GENERAL DESCRIPTION	2	SIA ALL
56-22-00	WINDOWS - EMERGENCY EXIT WINDOW - GENERAL DESCRIPTION	2	SIA ALL
56-31-00	WINDOWS - DOOR-MOUNTED WINDOWS - GENERAL DESCRIPTION	2	SIA ALL

ECCN 9E991 BOEING PROPRIETARY - See title page for details

THIS PAGE IS INTENTIONALLY LEFT BLANK

ECCN 9E991 BOEING PROPRIETARY - See title page for details

WINDOWS - INTRODUCTION

General

These are the types of windows on the airplane:

- Flight compartment windows (fixed and sliding)
- Passenger compartment windows
- Emergency exit windows
- Door-mounted windows.

All the windows can hold cabin pressurization loads and have fail safe properties.

ECCN 9E991 BOEING PROPRIETARY - See title page for details

WINDOWS - INTRODUCTION

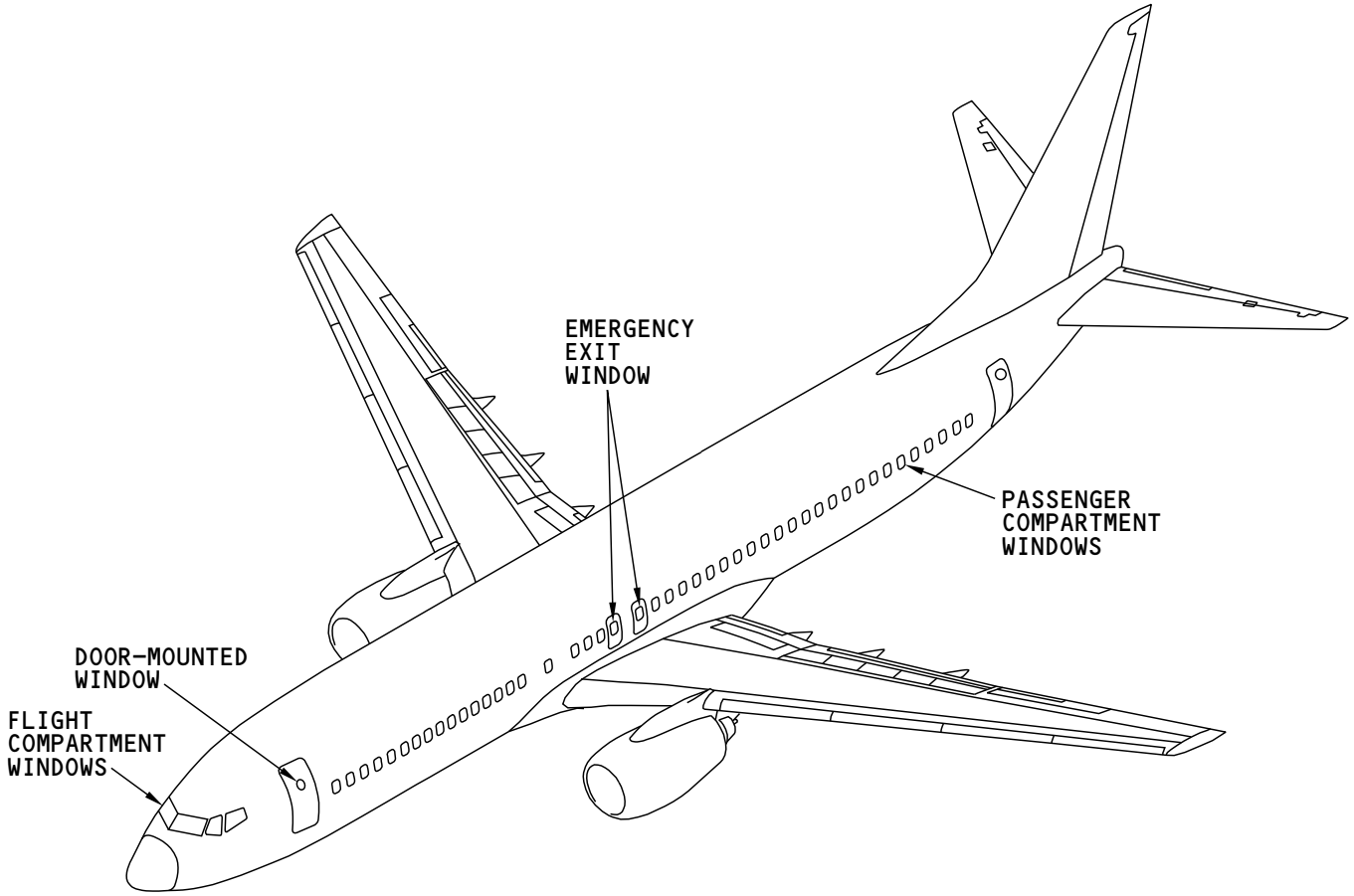

D65829 S0000161678_V1

WINDOWS - INTRODUCTION

ECCN 9E991 BOEING PROPRIETARY - See title page for details

THIS PAGE IS INTENTIONALLY LEFT BLANK

ECCN 9E991 BOEING PROPRIETARY - See title page for details

WINDOWS - FLIGHT COMPARTMENT - INTRODUCTION

General Description

Six windows are symmetrically located around the forward end of the flight compartment. The windows are designated right and left windows No.1, No.2, and No.3, as shown on Figure 1. The corresponding left and right windows are identically opposite assemblies.

Flight compartment windows No.1, and 3 are fixed and do not open. Window No.2 is a sliding window that opens.

The No.1, No.2, and heated No. 3 flight compartment windows are of laminated construction. The design of the No.1, windows which are the pilots' windshields, and the No.2 window, is to carry pressure loads and to withstand bird impact. The design of the No.3 window is to carry pressure loads.

A gasket or rubber-beaded seal attached to the edge of the windows makes a pressure seal. The aerodynamic smoother fills the space between the window frame and the fuselage skin on the No. 1, and No. 3 to make an aerodynamic seal. The aerodynamic smoother has an added function as a weather seal to keep out moisture.

Construction

The No.1, No.2, heated No.3, flight compartment windows are of laminated construction. The design of the No.1, windows which are the pilots' windshields, and the No.2 window, is to carry pressure loads and to withstand bird impact. The design of the No.3 window is to carry pressure loads.

ECCN 9E991 BOEING PROPRIETARY - See title page for details

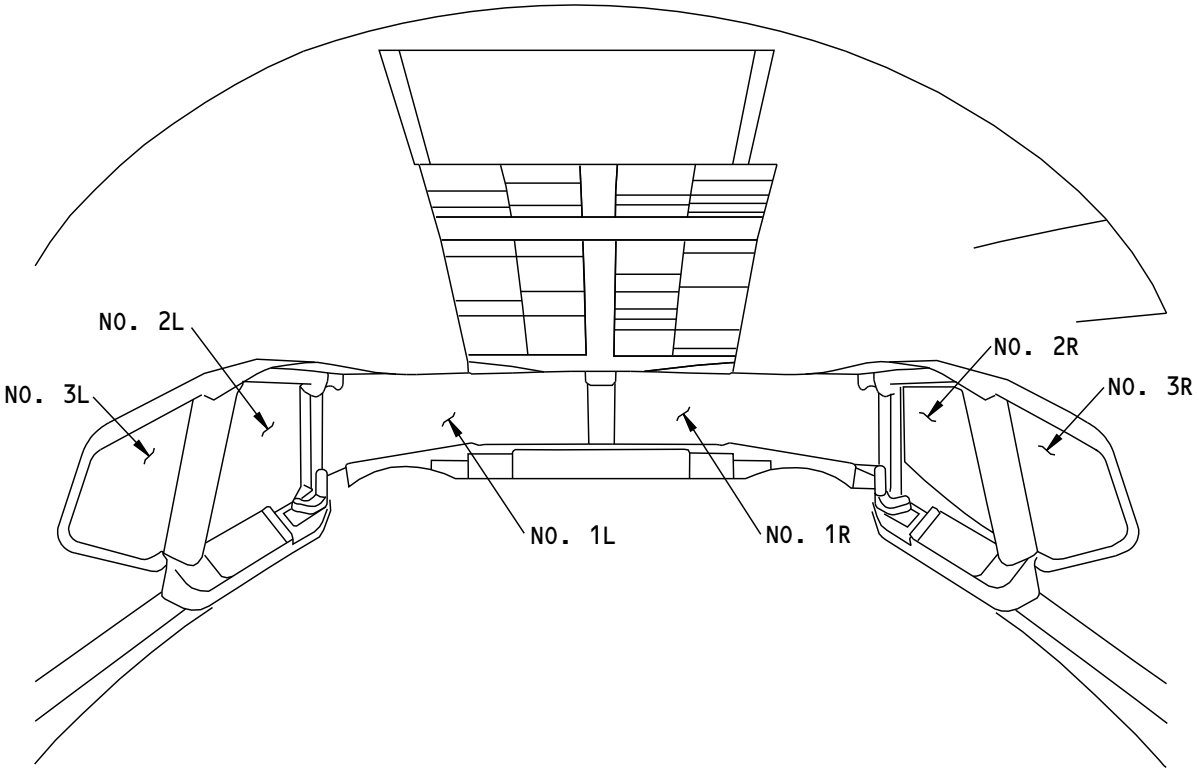

FLIGHT COMPARTMENT WINDOWS

D65179 S0000161776_V1

ECCN 9E991 BOEING PROPRIETARY - See title page for details

THIS PAGE IS INTENTIONALLY LEFT BLANK

ECCN 9E991 BOEING PROPRIETARY - See title page for details

General

The left No. 1 window is the pilot's windshield. The right No. 1 window is the co-pilot's windshield. The left and right windshields are opposite assemblies and installations. The windshields install internal to the airplane.

The windshields have laminated transparent layers, a phenolic edge material, and weigh approximately 50 lb (23 kg). The windshields use bolts to attach to the fuselage structure through the phenolic edge material.

Construction

Each windshield is a laminated assembly of layers of glass and vinyl or urethane. The structural inner glass pane carries pressure loads. The vinyl interlayer is structural for bird impact resistance and fail-safe pressure loads.

The current windshield manufactured by PPG has these layers: an non-structural outer glass pane, a non-structural urethane interlayer, a structural vinyl (polyvinyl butyral or PVB) interlayer, a non-structural urethane interlayer and an structural inner glass pane.

Current windshields can have a temporary rain repellent hydrophobic coating applied. Some older airplanes have an engaged or disengaged liquid rain repellent system. Windshield wipers supply a sufficient quantity of rain removal without a secondary rain repellent system.

Window Heat

A conductive film is located on the inner surface of the outer glass pane, which is a part of the windshield heat system that supplies the anti-fog and the anti-ice function. Bus bars, embedded in the windshield contact the conductive film near the top and bottom edges of the windshield. Along the edges of the windshield near the conductive film, there are two embedded temperature control sensors.

One control sensor is necessary to operate the windshield heat system. The second control sensor is a spare sensor that can be connected if the first sensor does not operate. Wires from the bus bars and sensors extend through the windshield to the terminals on the top and bottom edges.

ECCN 9E991 BOEING PROPRIETARY - See title page for details

WINDOWS - CONTROL CABIN FIXED WINDOWS - NO. 1 WINDOW

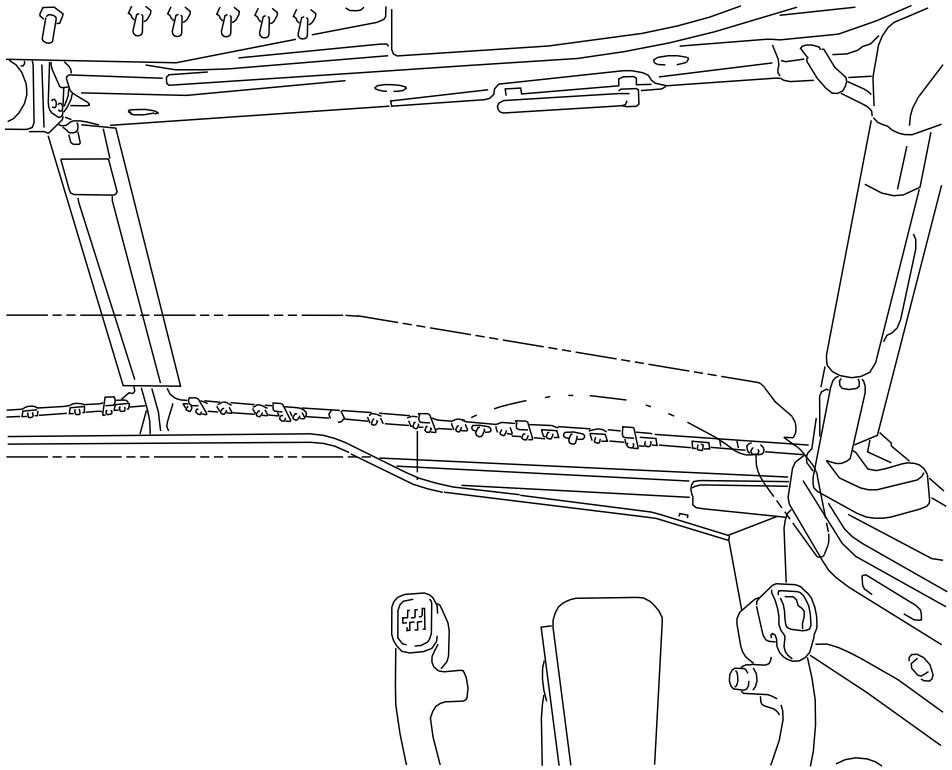

(RIGHT SIDE SHOWN)

M87810 S0004631955_V2

WINDOWS - CONTROL CABIN FIXED WINDOWS - NO. 1 WINDOW

ECCN 9E991 BOEING PROPRIETARY - See title page for details

WINDOWS - CONTROL CABIN FIXED WINDOWS - NO. 1 WINDOW

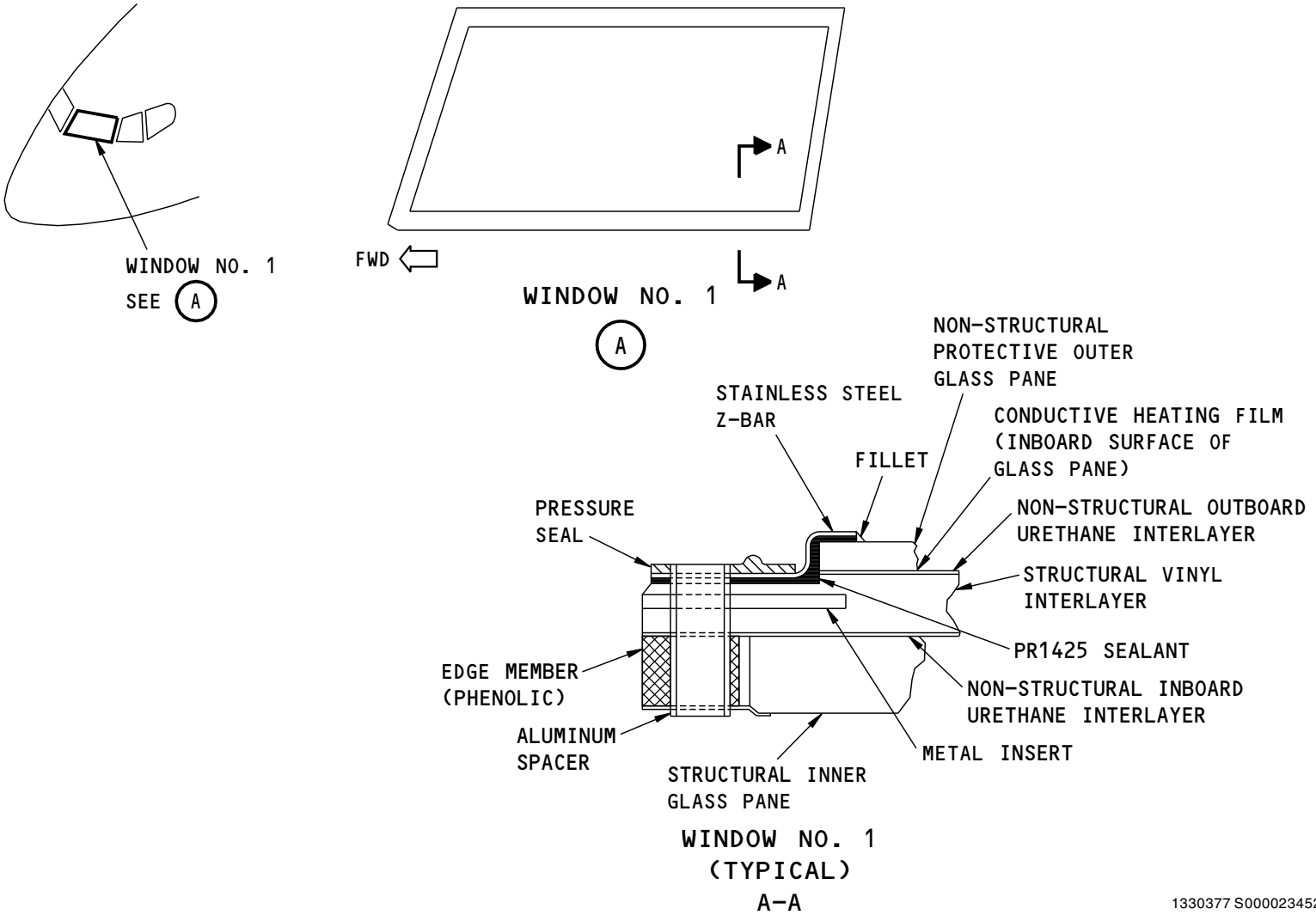

1330377 S0000234522_V1

WINDOWS - CONTROL CABIN FIXED WINDOWS - NO. 1 WINDOW

ECCN 9E991 BOEING PROPRIETARY - See title page for details

THIS PAGE IS INTENTIONALLY LEFT BLANK

ECCN 9E991 BOEING PROPRIETARY - See title page for details

General

The left No. 3 window is the pilot's side window. The right No. 3 window is the co-pilot's side window. The left and right windows are opposite assemblies and installations. The windows install internal to the airplane.

The windows have laminated transparent layers, a phenolic edge material, and weigh approximately 25 lb (11 kg). The windows use bolts to attach to the fuselage structure through the phenolic edge material.

Construction

There is one current manufacturer for the window. Each window is a laminated assembly of layers of glass, vinyl and urethane. The structural inner glass pane carries the pressure loads. The vinyl interlayer is structural for fail-safe pressure loads.

The window manufactured by PPG has these layers: an non-structural outer glass pane, a non-structural urethane interlayer, a structural vinyl (polyvinyl butyral or PVB) interlayer, a non-structural urethane interlayer and an inner structural glass pane.

Window Heat

A conductive film is located on the outer surface of the inner glass pane, which is a part of the window heat system that supplies the anti-fog function. Bus bars, embedded in the window contact the conductive film near the top and bottom edges of the window. The thermal switch attached to the bottom edge of the window controls the heat.

ECCN 9E991 BOEING PROPRIETARY - See title page for details

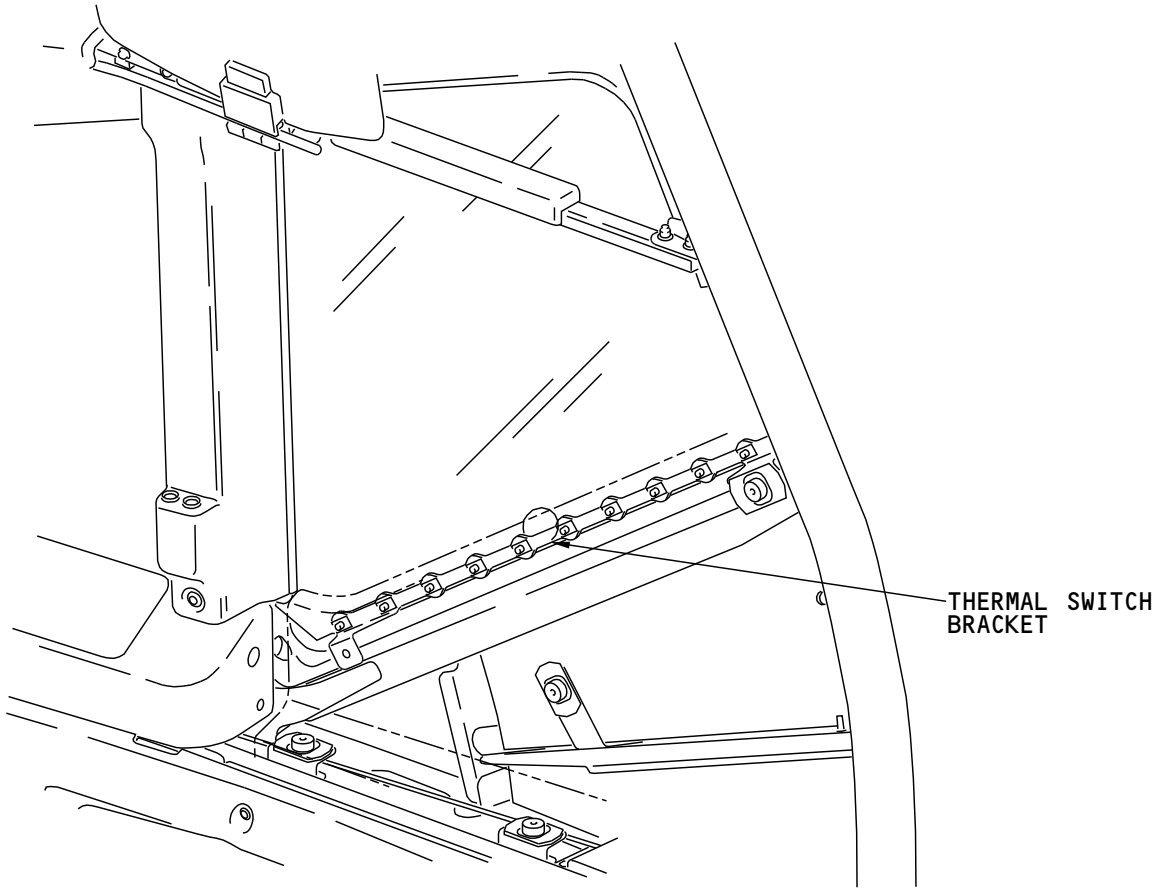

FLIGHT COMPARTMENT WINDOW NO. 3
(RIGHT SIDE SHOWN)

M87812 S0004631958_V2

ECCN 9E991 BOEING PROPRIETARY - See title page for details

WINDOWS - CONTROL CABIN FIXED WINDOWS - NO. 3 WINDOW

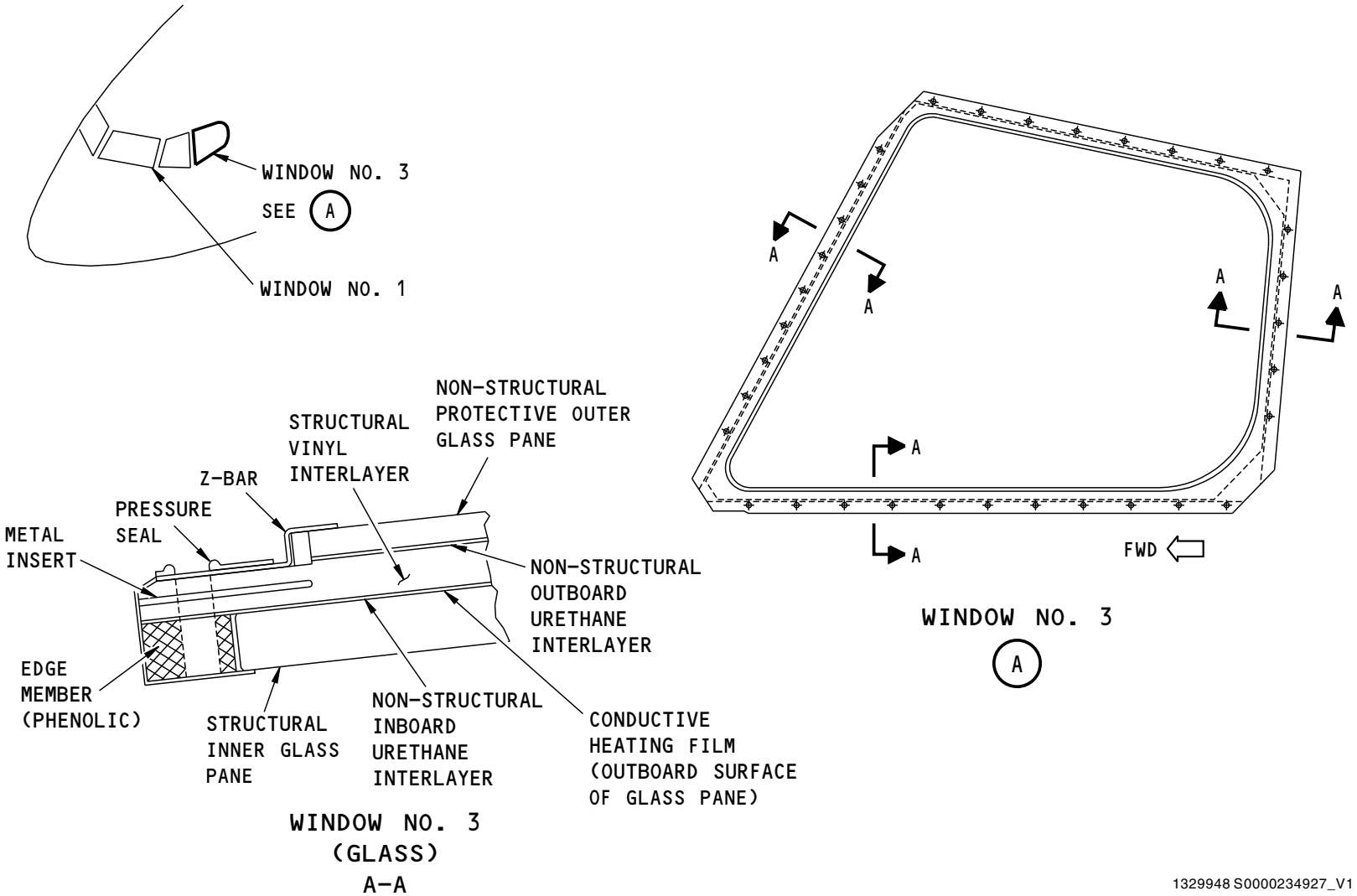

1329948 S0000234927_V1

WINDOWS - CONTROL CABIN FIXED WINDOWS - NO. 3 WINDOW (HEATED CONSTRUCTION)

ECCN 9E991 BOEING PROPRIETARY - See title page for details

WINDOWS - CONTROL CABIN SLIDING WINDOWS - NO. 2 OPENABLE WINDOW

Purpose

The left No. 2 window is the pilot's side window. The right No. 2 window is the co-pilot's side window. The left and right windows are opposite assemblies and installations. The No. 2 window is openable as an emergency exit.

You can operate the right window from outside of the airplane as an emergency exit.

General

The windows have laminated transparent layers, a metal insert, and weigh approximately 30 lb (14 kg). The window is clamped into a movable frame that forms the openable window assembly that slides fore and aft in a track. Because the side windows are plugs, internal cabin pressure holds the windows to the fuselage frame.

Construction

Each window is a laminated assembly of layers of glass and vinyl or urethane. The structural inner glass pane carries pressure loads. The vinyl interlayer is structural for bird impact resistance and fail-safe pressure loads.

The current window manufactured by PPG has these layers: an non-structural outer glass pane, a non-structural urethane interlayer, a structural vinyl (polyvinyl butyral or PVB) interlayer, a non-structural urethane interlayer and an structural inner glass pane.

Window Heat

A conductive film is located on the inner surface of the outer glass pane, which is a part of the window heat system that supplies the anti-fog and the anti-ice function. Bus bars, embedded in the window contact the conductive film near the forward and aft edges of the window. Along the edges of the window near the conductive film, there are two embedded temperature control sensors.

Physical Description

The No. 2 openable window has these parts:

- Handle with trigger
- Bellcranks
- Guide Pin
- Pushrods
- Clothes guard protector
- Link
- Springs
- Window open latch plate
- Upper roller
- Upper track
- Lower roller
- Lower track
- Latch mechanism rod
- External access door
- External release handle.

Functional Description

To open the window, operate the handle. This turns a bellcrank, which is connected to other bellcranks at the rear, top, and bottom of the window. This moves the window inboard. The guide pin prevents backward movement of the window until there is sufficient clearance. This allows the window to move back to the latched open position. When the window is moved to the rear, the lower aft roller moves to the window open latch plate. The window open latch plate is spring-loaded to lock the window in the open position.

ECCN 9E991 BOEING PROPRIETARY - See title page for details

The window is unlocked from its locked open position when you pull forward on the latch mechanism rod. This releases the window open latch plate and lets the window move forward. While the window moves forward, it resets the window open latch plate. Move the window forward by its handle until it touches the forward stops. As the handle is turned, the window is moved outboard, guided by the guide pin in the track, until the window is closed against the section 41 frame. When you release the handle, a trigger bolt latches the window closed.

Normal Operation

To open the window, hold the trigger and turn the handle back and inboard. After the window moves inboard, move it back until it locks it in the open position.

To close the window, pull forward on the latch mechanism rod to unlock the window. Hold the trigger and move the window forward until you can turn the handle forward and outboard. When you release the trigger, the window latches.

Emergency Operation

To open the window, push the external access door, and pull the external release handle. This will unlatch the window and move the window inwards. Then move the window to the rear.

Window Frame Scuff Plate

A scuff plate is attached to the upper forward corner of the fuselage frame for the No.2 window. This scuff helps to prevent contact between the movable frame and the bolt heads on the fuselage frame.

Training Information Point

WARNING BE CAREFUL WHEN YOU DO WORK ON THE WINDOW NO. 2. THE OUTPUT VOLTAGE OF THE AUTOTRANSFORMER IS 250-350 VOLTS. THIS CAN CAUSE INJURY TO PERSONS.

ECCN 9E991 BOEING PROPRIETARY - See title page for details

WINDOWS - CONTROL CABIN SLIDING WINDOWS - NO. 2 OPENABLE WINDOW

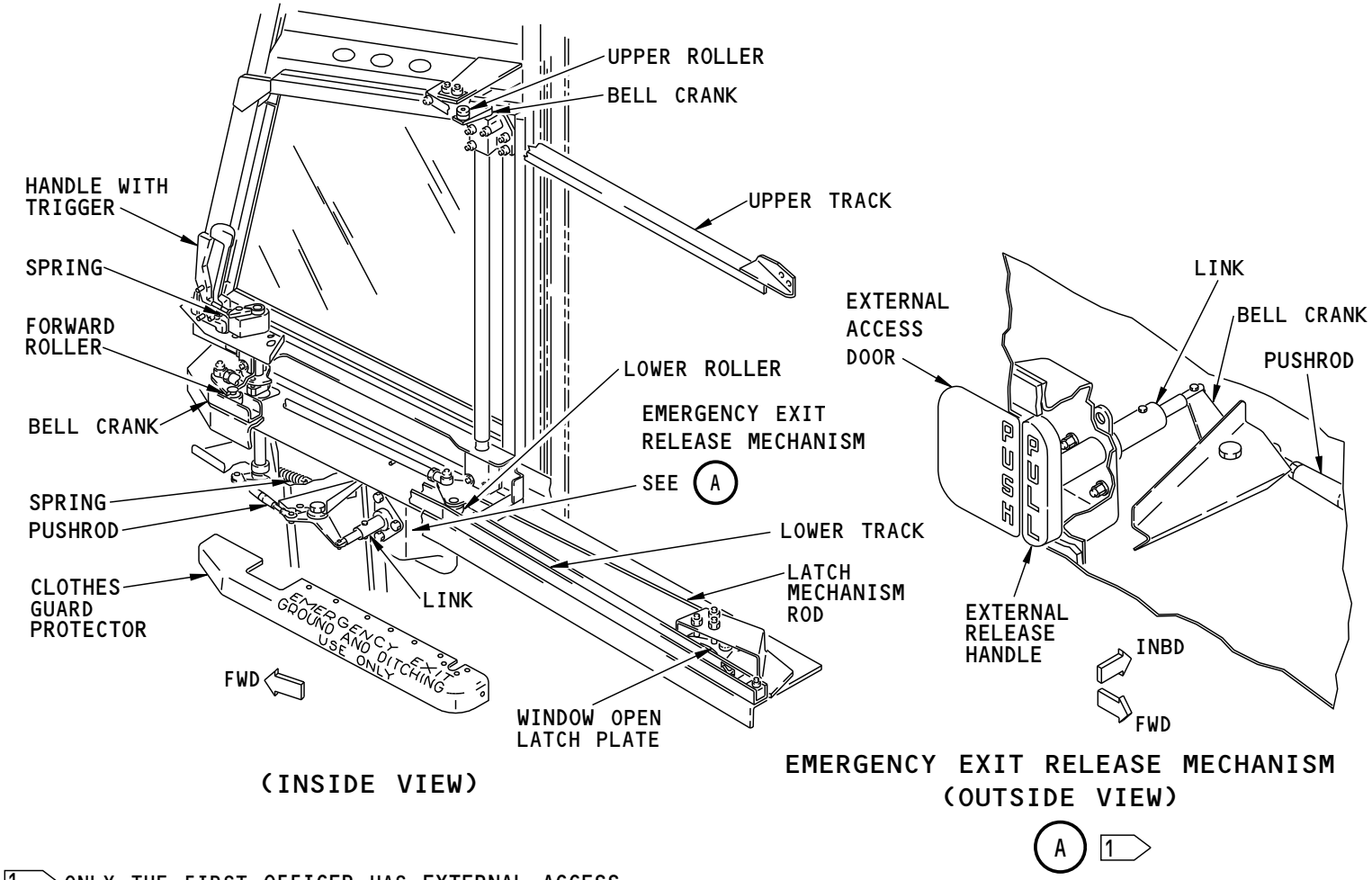

1 ONLY THE FIRST OFFICER HAS EXTERNAL ACCESS.

M87815 S0004631965_V2

WINDOWS - CONTROL CABIN SLIDING WINDOWS - NO. 2 OPENABLE WINDOW

ECCN 9E991 BOEING PROPRIETARY - See title page for details

WINDOWS - CONTROL CABIN SLIDING WINDOWS - NO. 2 OPENABLE WINDOW

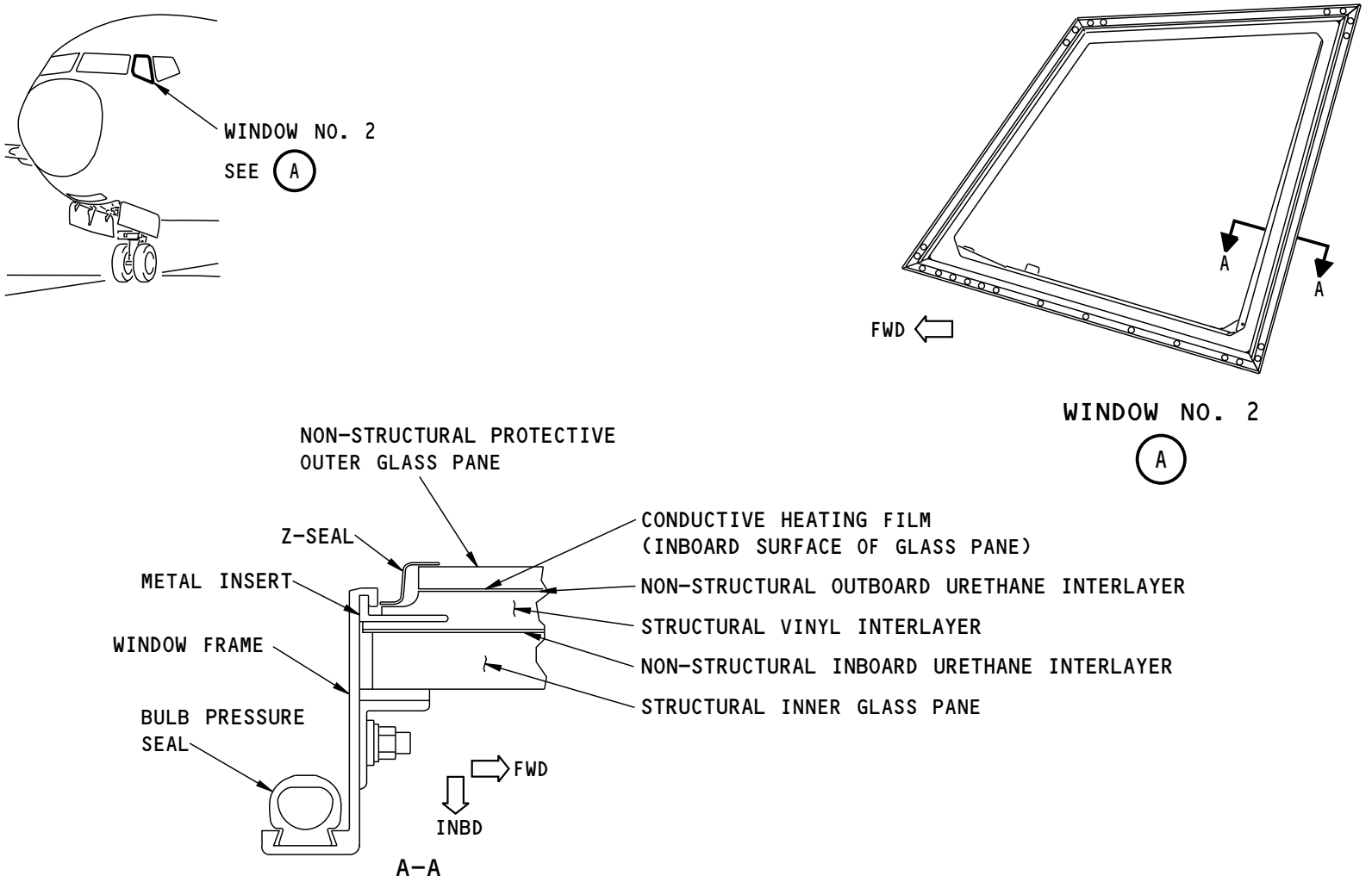

1330350 S0000234564_V1

WINDOWS - CONTROL CABIN SLIDING WINDOWS - NO. 2 OPENABLE WINDOW

ECCN 9E991 BOEING PROPRIETARY - See title page for details

THIS PAGE IS INTENTIONALLY LEFT BLANK

ECCN 9E991 BOEING PROPRIETARY - See title page for details

WINDOWS - PASSENGER CABIN WINDOWS - GENERAL DESCRIPTION

General

The passenger compartment windows have these components:

- Outer pane
- Middle pane
- Airflow dampener
- Inner pane.

The outer and middle panes are structural. The windows are plug type windows.

The outer pane is made of stretched acrylic plastic. It is rectangular with rounded corners and a beveled outer edge to fit with the window frame. The shape of the pane is curved to align with the fuselage contour.

The middle pane gives the structural fail-safe function. It can hold 1.5 times the normal pressure load. The middle pane is made of cast acrylic and has a shape like the outer pane, but with an edge not beveled. The middle pane is contained in the window seal. A small breather hole is near the top of the middle pane.

The airflow dampener helps to prevent the window from fogging during flight. The airflow dampener is made of injected molded white colored polycarbonate. The airflow dampener is attached above the breather hole on the middle pane.

The inner pane is not structural.

Location

The passenger compartment windows are between the fuselage frames in the passenger compartment.

ECCN 9E991 BOEING PROPRIETARY - See title page for details

WINDOWS - PASSENGER CABIN WINDOWS - GENERAL DESCRIPTION

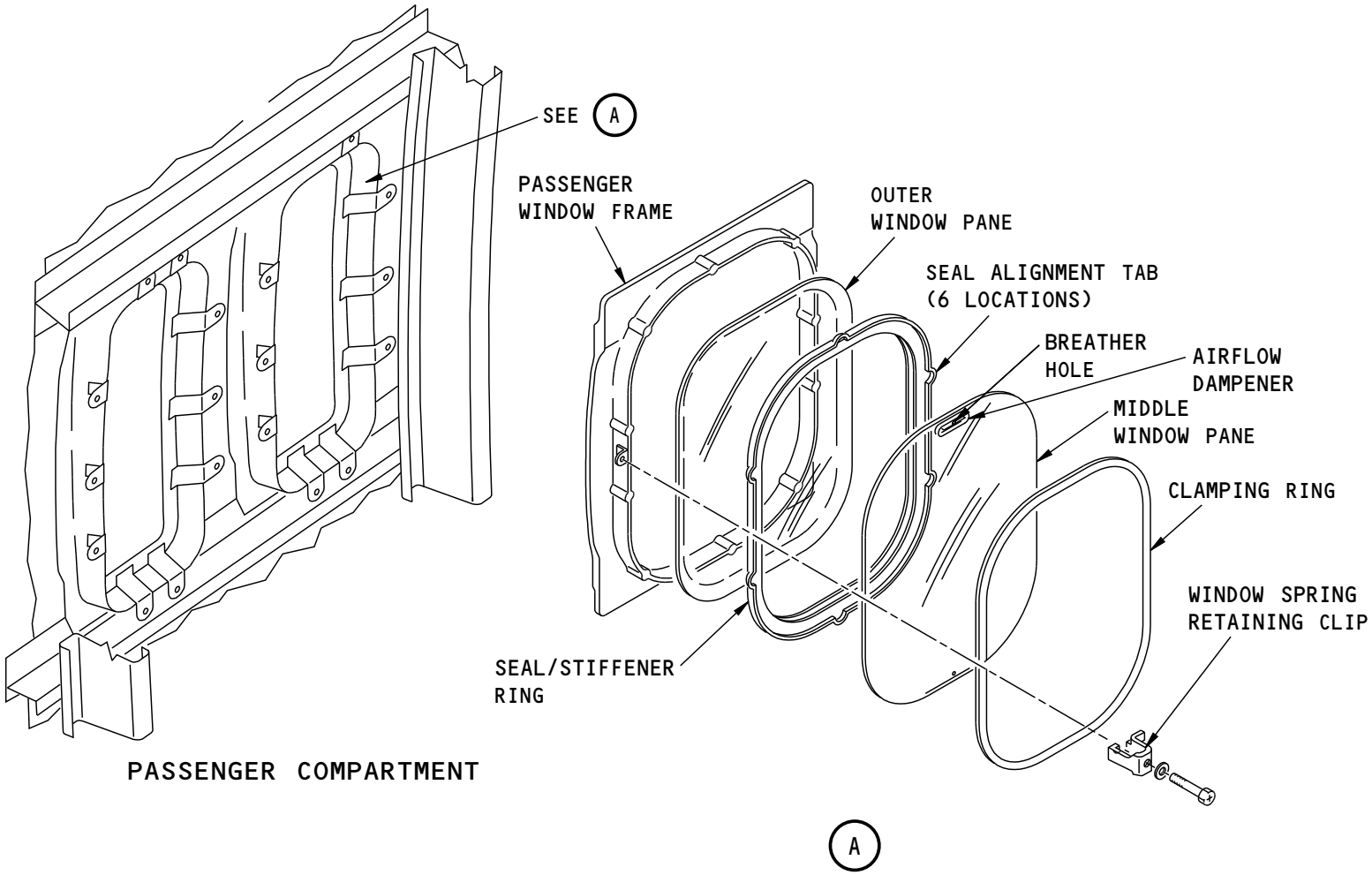

J72305 S0000176973_V2

WINDOWS - PASSENGER CABIN WINDOWS - GENERAL DESCRIPTION

ECCN 9E991 BOEING PROPRIETARY - See title page for details

THIS PAGE IS INTENTIONALLY LEFT BLANK

ECCN 9E991 BOEING PROPRIETARY - See title page for details

WINDOWS - EMERGENCY EXIT WINDOW - GENERAL DESCRIPTION

General

The emergency exit window has these components:

- Outer pane
- Middle pane
- Inner pane.

The outer and middle panes are structural. The windows are plug type windows.

The outer pane is made of stretched acrylic plastic. It is rectangular in shape with rounded corners and a beveled outer edge to fit with the window frame. The shape the pane is curved to align with the fuselage contour.

The middle pane gives the structural fail-safe function. It can hold 1.5 times the normal pressure load. The middle pane is made of cast acrylic and has a shape like the outer pane, but with an edge not beveled. The middle pane is contained in the window seal. A small breather hole is near the top of the middle pane.

The inner pane is not structural.

Location

The emergency exit windows are in each emergency exit in the passenger compartment.

ECCN 9E991 BOEING PROPRIETARY - See title page for details

WINDOWS - EMERGENCY EXIT WINDOW - GENERAL DESCRIPTION

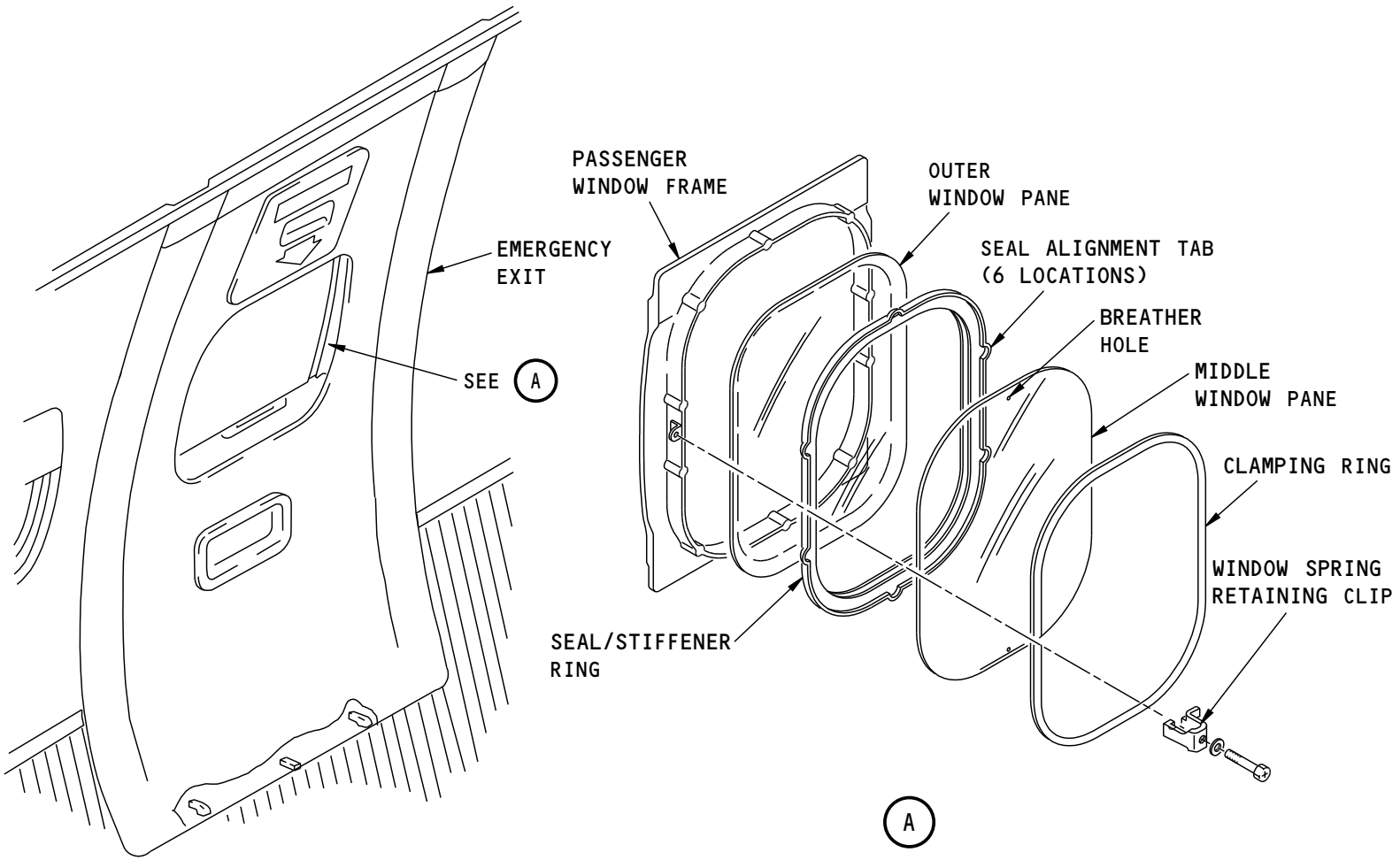

J72301 S0000176977_V2

WINDOWS - EMERGENCY EXIT WINDOW - GENERAL DESCRIPTION

ECCN 9E991 BOEING PROPRIETARY - See title page for details

THIS PAGE IS INTENTIONALLY LEFT BLANK

ECCN 9E991 BOEING PROPRIETARY - See title page for details

WINDOWS - DOOR-MOUNTED WINDOWS - GENERAL DESCRIPTION

General

The door-mounted windows have these components:

- Outer pane
- Middle pane
- Inner pane.

The outer and middle panes are structural. The outer and middle panes are resistant to 1.5 times the normal pressure loads at a temperature of 70F. The outer pane is made of stretched acrylic for more strength. The middle pane is made of a cast acrylic.

The inner pane is not structural. It connects to the cabin sidewall panel. The inner pane is made from polycarbonate.

ECCN 9E991 BOEING PROPRIETARY - See title page for details

WINDOWS - DOOR-MOUNTED WINDOWS - GENERAL DESCRIPTION

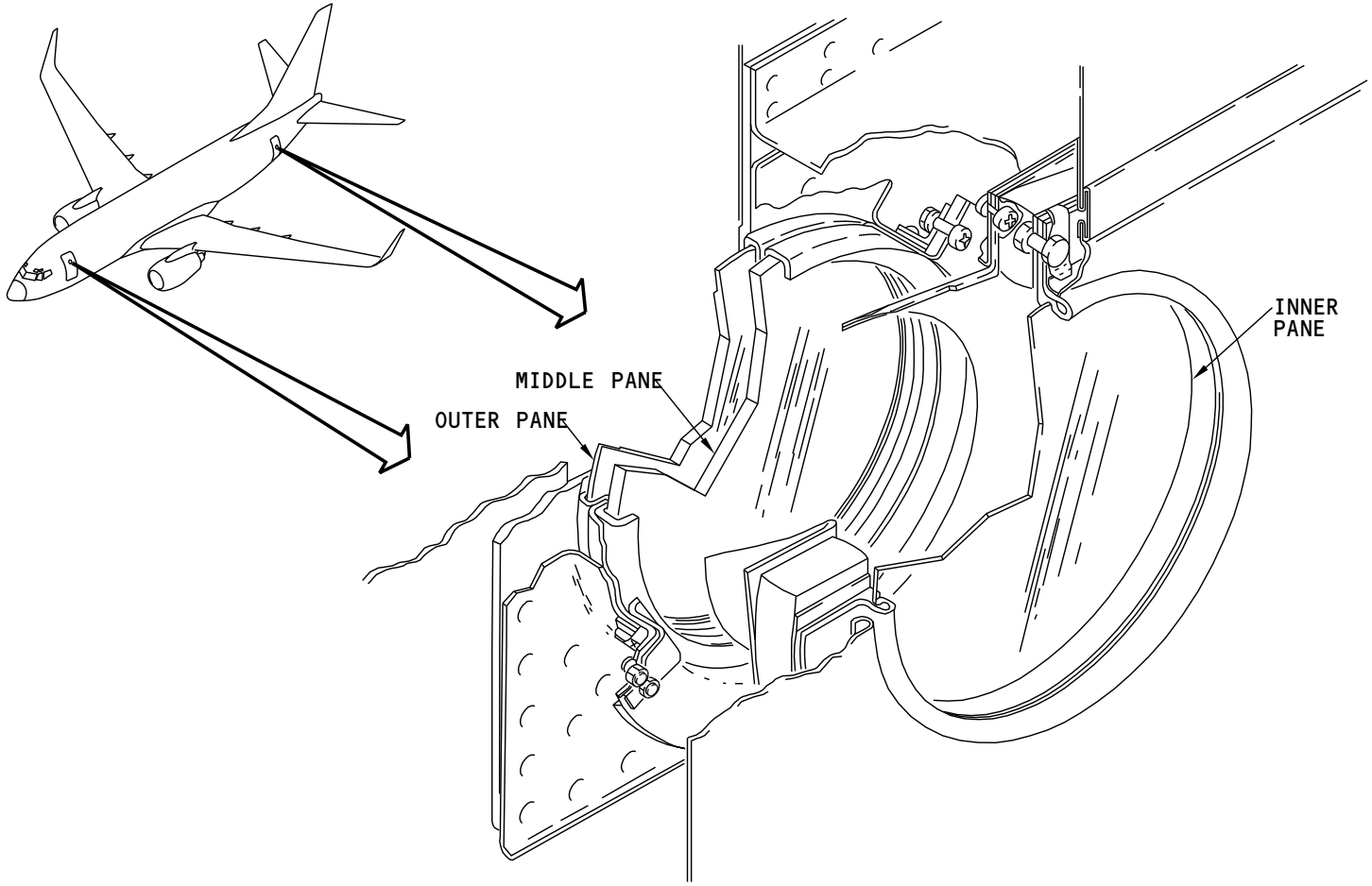

M87821 S0004631980_V1

WINDOWS - DOOR-MOUNTED WINDOWS - GENERAL DESCRIPTION

ECCN 9E991 BOEING PROPRIETARY - See title page for details